CO/ONY

196 West Broadway
New York, NY 10013

Studio Paolo Ferrari

Facet Mirror

The gem-like structure of the Facet Mirror Features a bevelled edge and can be oriented in any direction.

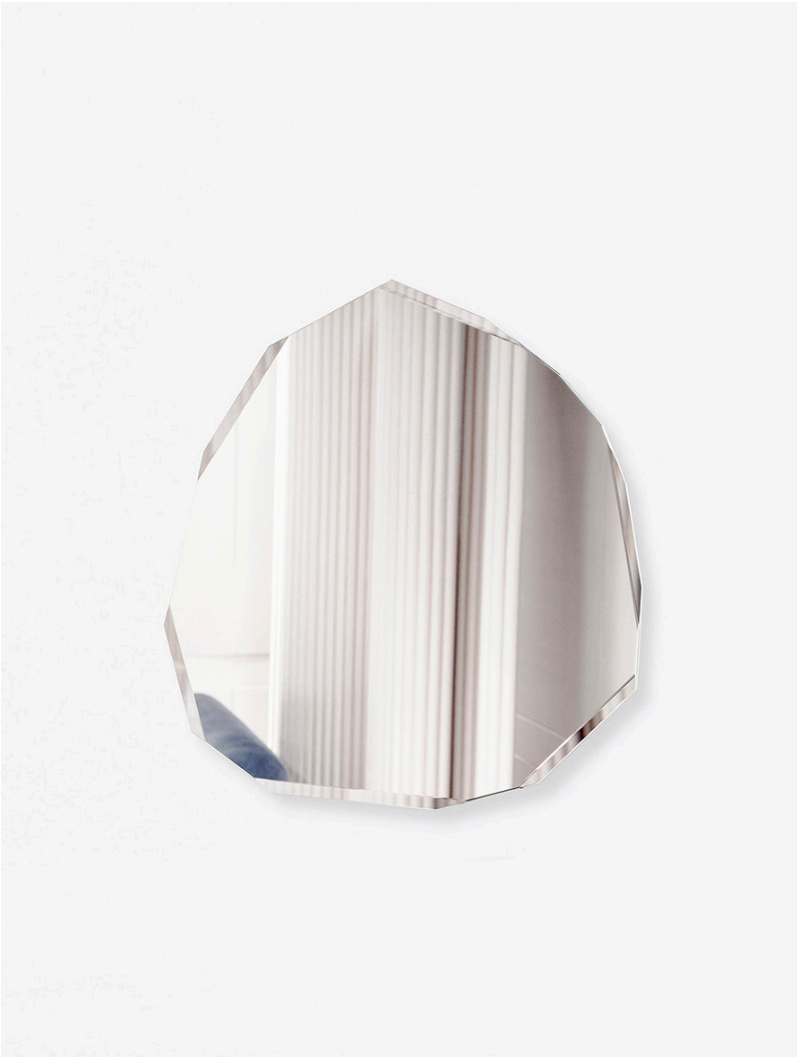

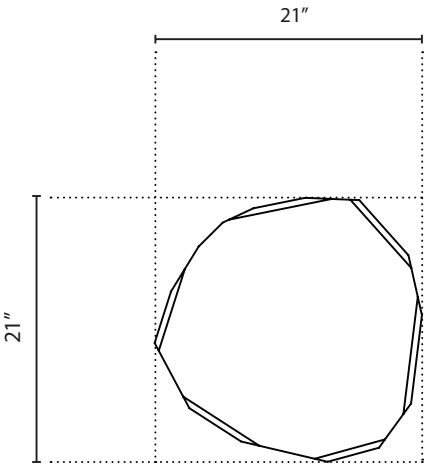

Standard Materials:

Glass Mirror

Standard Dimensions:

(1) 21”Dia
(2) 36” Dia
(3) 48” Dia

As Shown:

Clear Mirror

Lead Time:

14- 16 weeks

1.212.334.3808
info@goodcolony.com

196 West Broadway
New York, NY 10013

Studio Paolo Ferrari

Additional Drawings

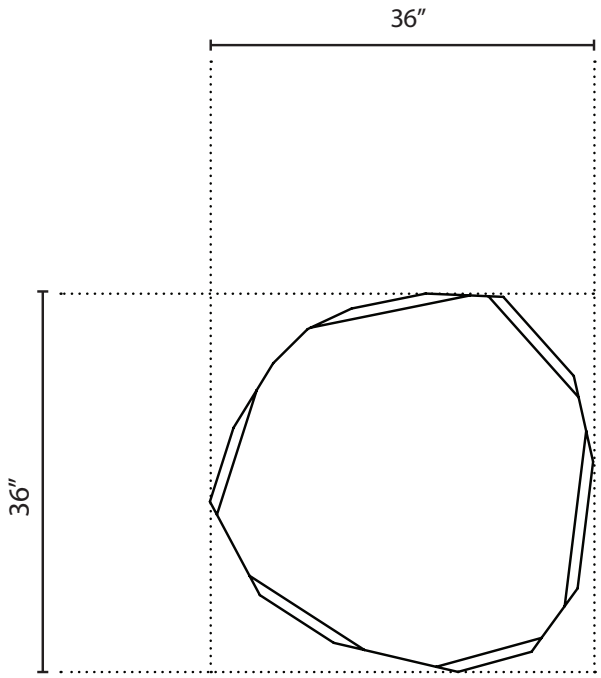

36”

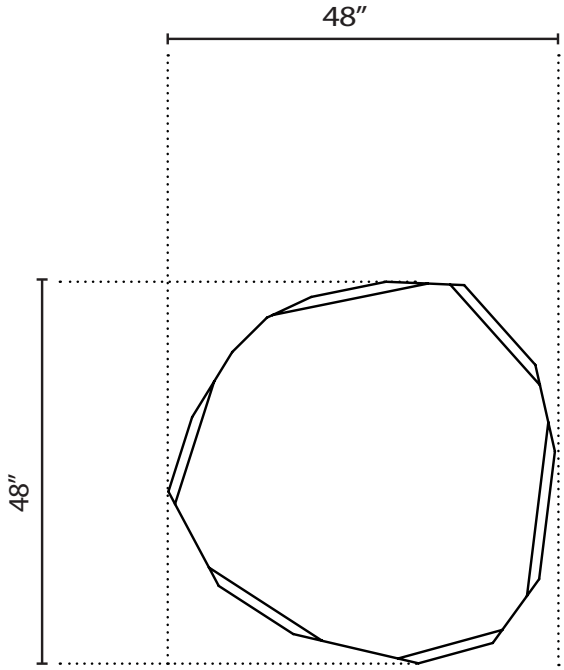

48”

1.212.334.3808
info@goodcolony.com

*Price Varriation